Current part is item (2,6) on diagram. Available at www.oshkoshequipment.com

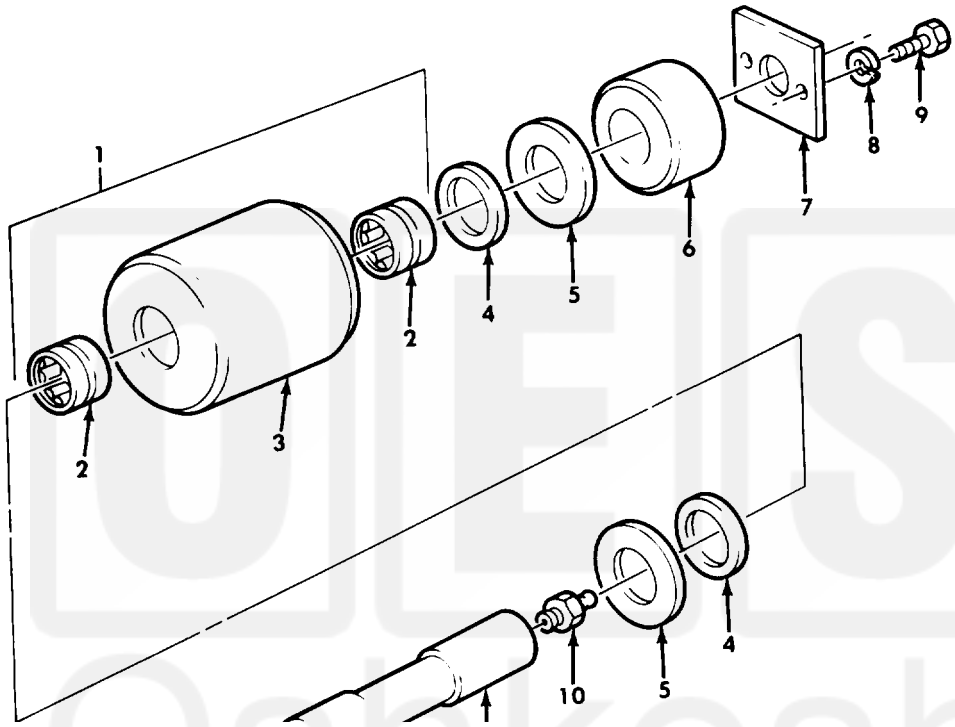

Figure 416. Wrecker Rear Winch Vertical Roller and Mounting Hardware.

Current part is item (2,6) on diagram. Available at www.oshkoshequipment.com

Current part is item (2,6) on diagram. Available at www.oshkoshequipment.com

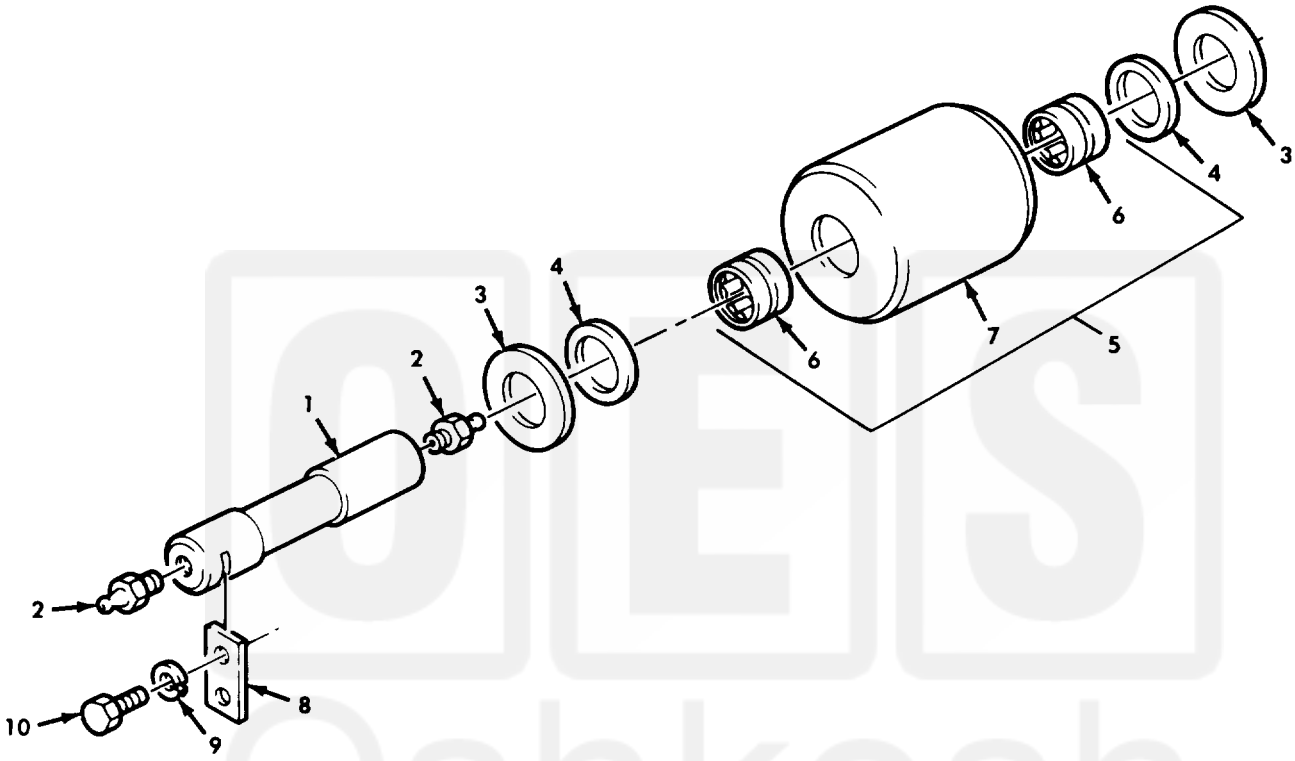

Figure 417. Wrecker Rear Winch Horizontal Roller and Mounting Hardware.

Current part is item (2,6) on diagram. Available at www.oshkoshequipment.com